REV/版本	DESCRIPTION/变更内容	DATE/日期	DRAWN BY/绘图

1) Product main performance/产品主要性能指标:

Operating Temperature/工作温度 : -55℃～150℃
Humidity(max)/最大潮湿 : <=95% [at 60 deg C / 140 F]
Shielding /屏蔽性能 : 75dB(10MHz) 40dB(1GHz)
Salt Spray Corrosion/盐 雾 : 96hr

Mechanical data/机械特性:
Vibration/振 动 : 15g[10Hz～2000Hz]
Shock Resistance/冲 击 : 100g[6ms]
Endurance (Shell)/机械寿命 : 5000+

2.电气性能
Insert Configuration/针芯配置:0BP.306 6Low Voltage
Pin Size/接触件直径:Φ0.5mm
Contact resistance接触电阻:≤15mΩ
Insulation resistance/绝缘电阻:5000MΩ(测试电压500V(DC))
Withstand voltage/耐电压:850V(AC)
Rated working current额定工作电流:2.5A

Other Specification/其它规格:
Contact PIN/接触体 : Gold plated Tin bronze/锡青铜镀金
Housing Material/外壳材质 : PEEK
Other Shell Material/其它壳体材质: 铜镀镍
Insulator material/绝缘体材料: PEEK
IP Rating/防护等级 : IP50
*ALL MATERIALS ARE RoHS COMPLIANT/所有材料均符合RoHS要求.

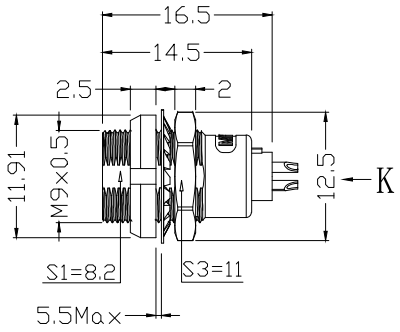

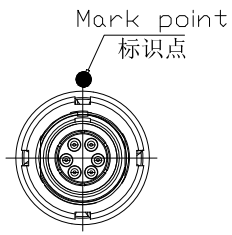

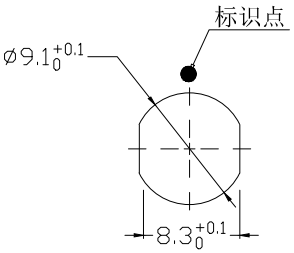

Panel cut-outs
建议安装开孔尺寸

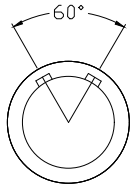

Socket front view
插座前视图

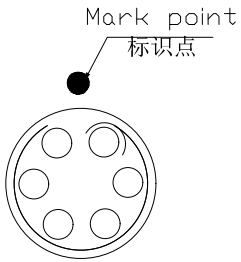

view K
K向孔位排列

DRAWN BY: 绘图:PD03	2024.05.28		
CHECKED BY: 审核:ZO1	2024.05.28		
APPROVED BY: 核准:PD05	2024.05.28		
GENERAL TOLERANCE (UNLESS SPECIFIED) ≤10 ±0.1; <10~≤20 ±0.15; <20~≤50 ±0.3; Angle ±1°	FIRST ANGLE PROJECTION	单位 UNIT: mm	名称 PART NAME: ZCB-0BP固定式插座 ZCB-0BP Fixed socket
		比例 SCALE: 1:1	
		SIZE: A4	型号 PART NAME: ZCB.0BP.306.KWKL
REV/版本	A1	SHEET: 1 OF 1	

美易连电子科技（深圳）有限公司
Meiyilian electronic technology(shenzhen)Co.,Ltd.

https://www.mylconnector.com/