REV/版本	DESCRIPTION/变更内容	DATE/日期	DRAWN BY/绘图

1) Product main performance/产品主要性能指标:

Operating Temperature/工作温度: -55℃～200℃
Humidity(max)/最大潮湿: <=95% [at 60 deg C / 140 F]
Shielding /屏蔽性能: 75dB(10MHz) 40dB(1GHz)
Salt Spray Corrosion/盐 雾: 96hr
P op (max)/最大环境压力: 60 bar (870 psi)
Insert Configuration/针芯配置: 0F.304 4Low Voltage
Pin Size/接触件直径: ϕ0.7mm
R (Max)/接触电阻: ≤12.5mΩ
Insulation resistance/绝缘电阻: 5000MΩ(测试电压500V(DC))
Withstand voltage/耐电压: 500V(AC)
Rated Current/额定电流: 6A

2) Mechanical data/机械特性:

Vibration/振 动 :10Hz～2000Hz,加速度147m/s^2,瞬断≤1 us
Shock Resistance/冲 击 :980m/s^2,瞬断≤1 us
Endurance (Shell)/机械寿命 : 5000

3) Other Specification/其它规格:

Contact PIN/接触件 :Gold-Tin bronze plating/锡青铜镀金
Housing Material/外壳材质 :black chrome plated brass/黄铜镀黑铬
Other metal spare parts/其余金属件 : nickel plated brass/黄铜镀镍
Insulator material/绝缘材料: PPS
IP Rating/防护等级 : IP68(插合状态)
*ALL MATERIALS ARE RoHS COMPLIANT/所有材料均符合RoHS要求

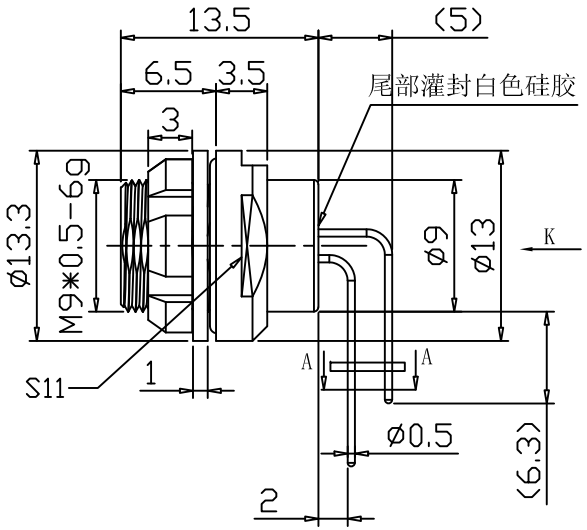

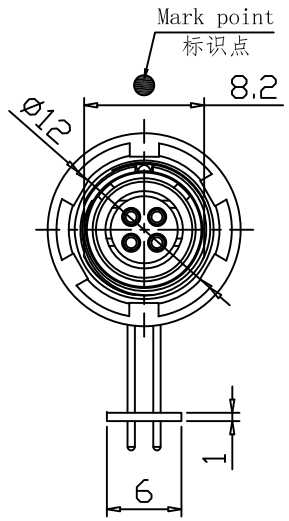

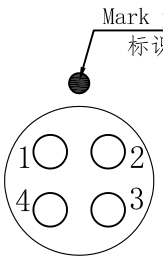

View k
K向孔位排列

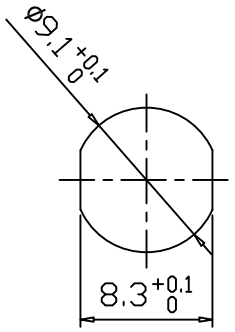

Panel cut-outs
建议安装开孔尺寸

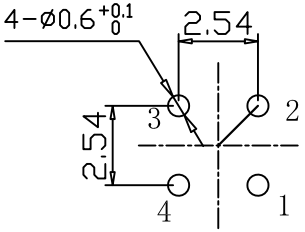

PCB cut-outs(A-A)
建议安装开孔尺寸

TOLERANCES UNLESS OTHERWISE SPECIFIED: 未标注尺寸公差:±0.1 未标注角度公差:±0.5°	First ANGLE PROJECTION		Product name/产品名称: Socket/插座
	SIZE: A4	UNITS: mm	
	SCALE: 1: 1	SHEET: 1 OF 1	
DRAWN BY: 绘图: Pd05	DATE/日期: 2024.08.19	QM NO 料号	JX-DC-4KVZ
		DRAWING NO 图号	REV/版本
CHECKED BY: 审核: Pd04	DATE/日期: 2024.08.19	CUSTOMER NO 客户料号	A1
APPROVED BY: 核准: Pd02	DATE/日期: 2024.08.19	QM(Quanma) Connector Shenzhen Co. LTD 深圳市全马连接器有限公司	

Web: //www.quanma-china.com/