REV/版本	DESCRIPTION/变更内容	DATE/日期	DRAWN BY/绘图

1.Product main performance/产品主要性能指标:

Operating Temperature/工作温度 : -55℃～150℃
Humidity(max)/最大潮湿 : <=95% [at 60 deg C / 140 F]
Salt Spray Corrosion/盐 雾 : 96hr

Mechanical data/机械特性:
Vibration/振　动 : 15g[10Hz～2000Hz]
Endurance (Shell)/机械寿命 : 1200+

2.电气性能
Insert Configuration/针芯配置:OP.304 4Low Voltage
Pin Size/接触件直径:⌀0.7mm
Contact resistance接触电阻:≤12.5mΩ
Insulation resistance/绝缘电阻:5000MΩ(测试电压500V(DC))
Withstand voltage/耐电压:1500V(AC)
Rated working current额定工作电流:7.0A
Cable/配接电缆:⌀3.0mm-⌀4.0mm

Other Specification/其它规格:
Contact PIN/接触体 : Gold plated Tin bronze/锡青铜镀金
Housing Material/外壳材质 : PSU
Other Shell Material/其它壳体材质: PSU
Insulator material/绝缘体材料: PEEK
IP Rating/防护等级 : IP50
*ALL MATERIALS ARE RoHS COMPLIANT/所有材料均符合RoHS要求.

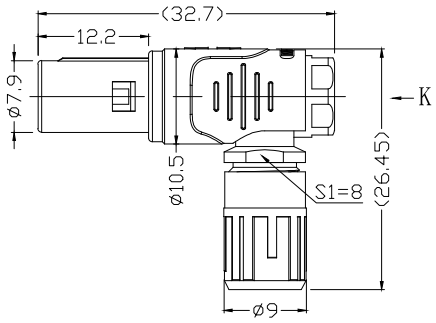

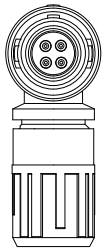

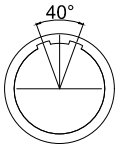

Plug front view
插头前视图

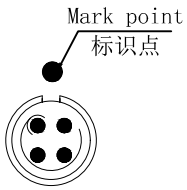

view K
K向孔位排列

DRAWN BY: 绘图:PD03 2024.05.28 CHECKED BY: 审核:Z01 2024.05.28 APPROVED BY: 核准:PD05 2024.05.28	MEIYILIAN 美易连	美易连电子科技（深圳）有限公司 Meiyilian electronic technology(shenzhen)Co.,Ltd.	
GENERAL TOLERANCE (UNLESS SPECIFIED) ≤10 ±0.1 (10~≤20 ±0.15 (20~≤50 ±0.3 Angle ±1°	FIRST ANGLE PROJECTION	单位 UNTT: mm 比例 SCALE: 1:1 SIZE: A4 SHEET: 1 OF 1	名称 PART NAME: PWA-OP 90° 弯角插头（不带护套式尾帽） PWA-OP 90° Angle Plug (without jacketed tail cap)
REV/版本 A1			型号 PART NAME: PWA.OP.304.PKAC42G

https://www.mylconnector.com/