| REV/版本 | DESCRIPTION/变更内容 | DATE/日期 | DRAWN BY/绘图 |
|---|---|---|---|
| | | | |

1.Product main performance/产品主要性能指标:
Operating Temperature/工作温度 : -55℃～125℃
Humidity(max)/最大潮湿 : <=95% [at 60 deg C / 140 F]
Shielding /屏蔽性能 : 75dB(10MHz) 40dB(1GHz)
Salt Spray Corrosion/盐 雾 : 96hr
P op (max)/最大环境压力 : 60 bar (870 psi)

Mechanical data/机械特性:
Vibration/振 动 : 15g[10Hz～2000Hz]
Shock Resistance/冲 击 : 300g[3ms]
Endurance (Shell)/机械寿命 : 2000次

2.电气性能
Insert Configuration/针芯配置:2M.302 2Low Voltage
Pin Size/接触件直径:Ø2.0mm
Contact resistance接触电阻:≤3.5mΩ
Insulation resistance/绝缘电阻:5000MΩ(测试电压500V(DC))
Withstand voltage/耐电压:1000V(AC)
Rated working current额定工作电流:30.0A

Other Specification/其它规格:
Contact PIN/接触体 : Gold plated Tin bronze/锡青铜镀金
Housing Material/外壳材质 : Gun color plated aluminium /铝合金镀枪色
Other metal spare parts/其余金属件 : Nickel plated brass/铜镀镍
Glue filling type/灌胶类型: White silica gel/白色硅胶
Insulator material/绝缘材料: PPS
IP Rating/防护等级 :IP68(头座配合)
*ALL MATERIALS ARE RoHS COMPLIANT/所有材料均符合RoHS要求.

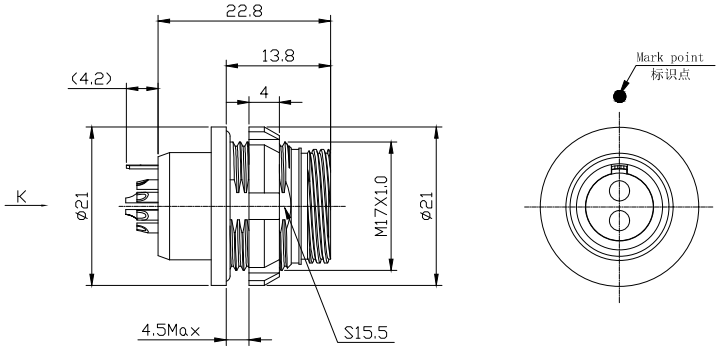


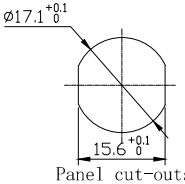

Panel cut-outs
建议安装开孔尺寸

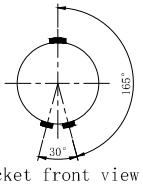

Socket front view
插座前视图

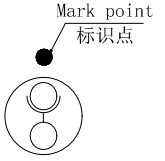

view K
K向孔位排列

| | | | |
|---|---|---|---|
| DRAWN BY: 绘图:PD03 2024.05.28<br>CHECKED BY: 审核:ZO1 2024.05.28<br>APPROVED BY: 核准:PD05 2024.05.28 | MEIYILIAN 美易连电子科技（深圳）有限公司<br>Meiyilian electronic technology(shenzhen)Co.,Ltd. | | |
| GENERAL TOLERANCE (UNLESS SPECIFIED)<br>≤10 ±0.1<br><10~≤20 ±0.15<br><20~≤50 ±0.3<br>Angle ±1° | FIRST ANGLE PROJECTION | 单位 UNIT: mm<br>比例 SCALE: 1:1<br>SIZE: A4 | 名称 PART NAME: ZGA-2M固定式插座 ZGA-2M Fixed socket<br>型号 PART NAME: ZGA.2M.302.XLL |
| | REV/版本 A1 | SHEET: 1 OF 1 | |


https://www.mylconnector.com/