REV/版本	DESCRIPTION/变更内容	DATE/日期	DRAWN BY/绘图

1.Product main performance/产品主要性能指标:

Operating Temperature/工作温度 : -55℃～125℃

Humidity(max)/最大潮湿 : <=95% [at 60 deg C / 140 F]

Shielding /屏蔽性能 : 75dB(10MHz) 40dB(1GHz)

Salt Spray Corrosion/盐 雾 : 96hr

P op (max)/最大环境压力 : 60 bar (870 psi)

Mechanical data/机械特性:

Vibration/振 动 : 15g[10Hz～2000Hz]

Shock Resistance/冲 击 : 300g[3ms]

Endurance (Shell)/机械寿命 : 2000次

2.电气性能

Insert Configuration/针芯配置:3M.304 4Low Voltage

Pin Size/接触件直径:Ø2.0mm

Contact resistance接触电阻:≤3.5mΩ

Insulation resistance/绝缘电阻:5000MΩ(测试电压500V(DC))

Withstand voltage/耐电压:875V(AC)

Rated working current额定工作电流:19.0A

Other Specification/其它规格:

Contact PIN/接触体 : Gold plated Tin bronze/锡青铜镀金

Housing Material/外壳材质 : Gun color plated aluminium /铝合金镀枪色

Other metal spare parts/其余金属件 : Nickel plated brass/铜镀镍

Glue filling type/灌胶类型: White silica gel/白色硅胶

Insulator material/绝缘材料: PPS

IP Rating/防护等级 :IP68(头座配合)

*ALL MATERIALS ARE RoHS COMPLIANT/所有材料均符合RoHS要求.

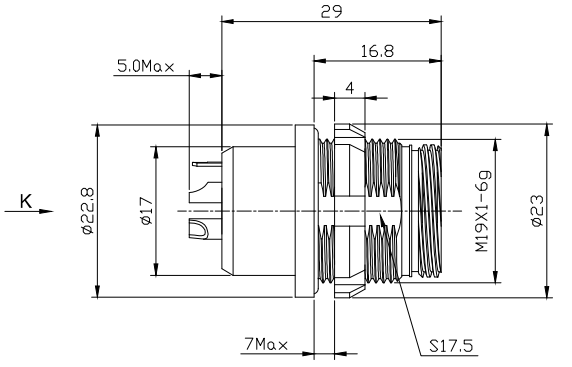

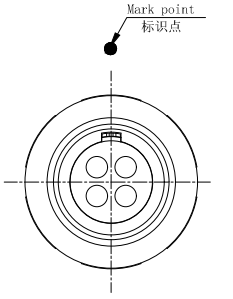

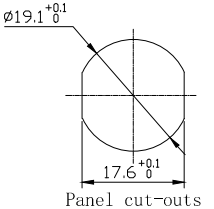

Panel cut-outs
建议安装开孔尺寸

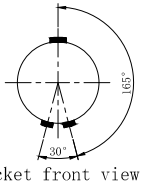

Socket front view
插座前视图

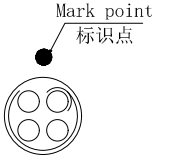

view K
K向孔位排列

DRAWN BY: 绘图:PD03	2024.05.28	MEIYILIAN 美易连	美易连电子科技（深圳）有限公司 Meiyilian electronic technology(shenzhen)Co.,Ltd.
CHECKED BY: 审核:ZO1	2024.05.28		
APPROVED BY: 核准:PD05	2024.05.28		

GENERAL TOLERANCE (UNLESS SPECIFIED) ≤10 ±0.1; <10~≤20 ±0.15; <20~≤50 ±0.3; Angle ±1°	FIRST ANGLE PROJECTION	单位 UNIT: mm; 比例 SCALE: 1:1; SIZE: A4	名称 PART NAME: ZGA-3M固定式插座 ZGA-3M Fixed socket
	REV/版本 A1	SHEET: 1 OF 1	型号 PART NAME: ZGA.3M.304.XLL

https://www.mylconnector.com/