REV/版本	DESCRIPTION/变更内容	DATE/日期	DRAWN BY/绘图

1) Product main performance/产品主要性能指标:

Operating Temperature/工作温度 : -55℃～200℃
Humidity(max)/最大潮湿 : <=95% [at 60 deg C / 140 F]
Shielding /屏蔽性能 : 75dB(10MHz) 40dB(1GHz)
Salt Spray Corrosion/盐 雾 : 96hr
P op (max)/最大环境压力 : 60 bar (870 psi)

Mechanical data/机械特性:
Vibration/振 动 : 15g[10Hz～2000Hz]
Shock Resistance/冲 击 : 100g[6ms]
Endurance (Shell)/机械寿命 : 5000+

2.电气性能
Insert Configuration/针芯配置:3B.303 3Low Voltage
Pin Size/接触件直径:Φ2.0mm
Contact resistance接触电阻:≤3.5mΩ
Insulation resistance/绝缘电阻:5000MΩ(测试电压500V(DC))
Withstand voltage/耐电压:875V(AC)
Rated working current额定工作电流:25.0A

Other Specification/其它规格:
Contact PIN/接触体: Gold plated Tin bronze/锡青铜镀金
Housing Material/外壳材质: Chrome plated brass/铜镀珍珠铬
Other metal spare parts/其余金属件: Nickel plated brass/铜镀镍
Insulator material/绝缘材料: PPS
IP Rating/防护等级: IP50
*ALL MATERIALS ARE RoHS COMPLIANT/所有材料均符合RoHS要求.

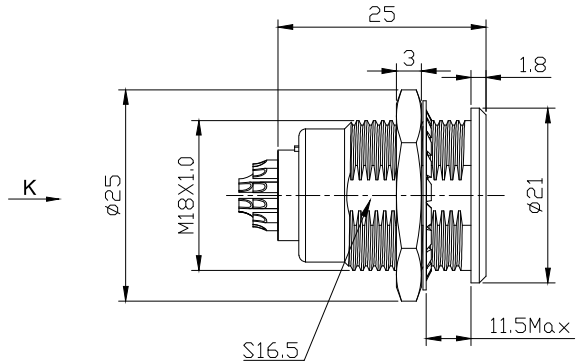

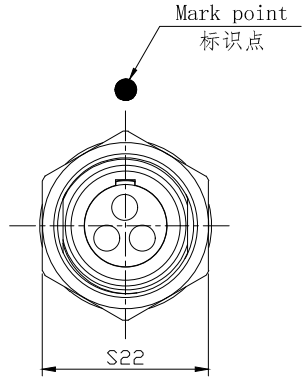

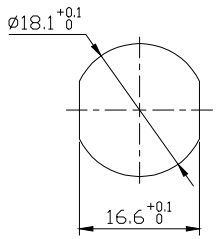

Panel cut-outs
建议安装开孔尺寸

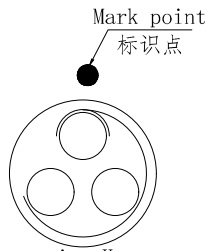

view K
K向孔位排列

DRAWN BY: 绘图:PD03 2024.05.28 CHECKED BY: 审核:ZO1 2024.05.28 APPROVED BY: 核准:PD05 2024.05.28	MEIYILIAN	美易连电子科技（深圳）有限公司 Meiyilian electronic technology(shenzhen)Co.,Ltd.		
GENERAL TOLERANCE (UNLESS SPECIFIED) ≤10 ±0.1 <10~≤20 ±0.15 <20~≤50 ±0.3 Angle ±1°	FIRST ANGLE PROJECTION	单位 UNTT: mm 比例 SCALE: 1:1 SIZE: A4	名称 PART NAME	3B-ZG固定式插座 3B-ZG Fixed socket
	REV/版本 A1	SHEET: 1 OF 1	型号 PART NAME	ZGG.3B.303.CLL

https://www.mylconnector.com/