REV/版本	DESCRIPTION/变更内容	DATE/日期	DRAWN BY/绘图

1) Product main performance/产品主要性能指标:

Operating Temperature/工作温度 : -55℃～200℃
Humidity(max)/最大潮湿 : <=95% [at 60 deg C / 140 F]
Shielding /屏蔽性能 : 75dB(10MHz) 40dB(1GHz)
Salt Spray Corrosion/盐 雾 : 96hr
P op (max)/最大环境压力 : 60 bar (870 psi)

Mechanical data/机械特性:
Vibration/振 动 : 15g[10Hz～2000Hz]
Shock Resistance/冲 击 : 100g[6ms]
Endurance (Shell)/机械寿命 : 5000次
Cable/配接电缆:Φ13.1mm-Φ14.0mm

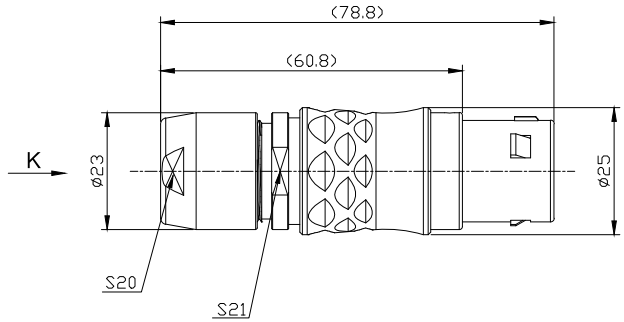

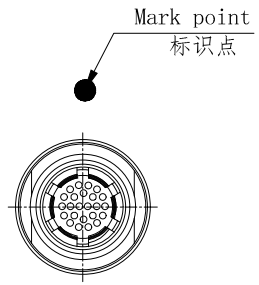

2.电气性能

Insert Configuration/针芯配置:4B.324 24Low Voltage
Pin Size/接触件直径:Φ0.9mm
Contact resistance接触电阻:≤9mΩ
Insulation resistance/绝缘电阻:5000MΩ(测试电压500V(DC))
Withstand voltage/耐电压:750V(AC)
Rated working current额定工作电流:7.0A

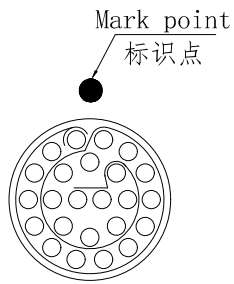

view K
K向孔位排列

Other Specification/其它规格:
Contact PIN/接触体: Gold plated Tin bronze/锡青铜镀金
Housing Material/外壳材质: Chrome plated brass/铜镀珍珠铬
Other metal spare parts/其余金属件: Nickel plated brass/铜镀镍
Insulator material/绝缘材料: PPS
IP Rating/防护等级: IP50
*ALL MATERIALS ARE RoHS COMPLIANT/所有材料均符合RoHS要求.

DRAWN BY: 绘图:PD03 2024.05.28 CHECKED BY: 审核:Z01 2024.05.28 APPROVED BY: 核准:PD05 2024.05.28	MEIYILIAN	美易连电子科技（深圳）有限公司 Meiyilian electronic technology(shenzhen)Co.,Ltd.	
GENERAL TOLERANCE (UNLESS SPECIFIED) ≤10 ±0.1 >10~≤20 ±0.15 >20~≤50 ±0.3 Angle ±1°	FIRST ANGLE PROJECTION	单位 UNIT: mm 比例 SCALE: 1:1 SIZE: A4 SHEET: 1 OF 1	名称 PART NAME: 4B-TG直式插头（不带护套式尾帽）4B-TG Straight plug (without jacketed tail cap) 型号 PART NAME: TGG.4B.324.CLAD142
REV/版本	A1		

https://www.mylconnector.com/