REV/版本	DESCRIPTION/变更内容	DATE/日期	DRAWN BY/绘图

1) Product main performance/产品主要性能指标:

Operating Temperature/工作温度 : -55℃～200℃
Humidity(max)/最大潮湿 : <=95% [at 60 deg C / 140 F]
Shielding /屏蔽性能 : 75dB(10MHz) 40dB(1GHz)
Salt Spray Corrosion/盐 雾 : 96hr
P op (max)/最大环境压力 : 60 bar (870 psi)

Mechanical data/机械特性:
Vibration/振 动 : 15g[10Hz～2000Hz]
Shock Resistance/冲 击 : 100g[6ms]
Endurance (Shell)/机械寿命 : 5000次
Cable/配接电缆:Φ2.4mm-Φ3.3mm

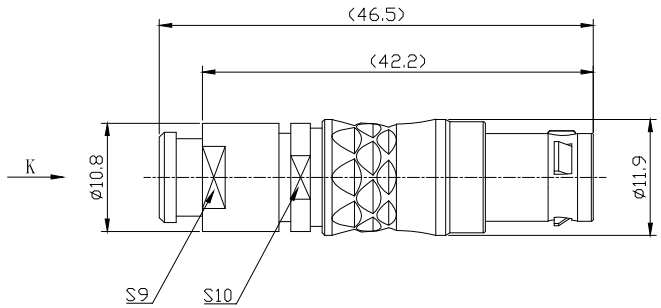

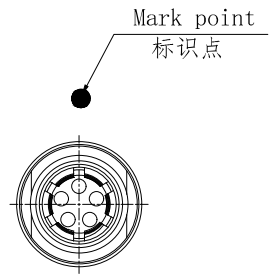

2.电气性能

Insert Configuration/针芯配置:1B.305 5Low Voltage
Pin Size/接触件直径:Φ0.9mm
Contact resistance接触电阻:≤9mΩ
Insulation resistance/绝缘电阻:5000MΩ(测试电压500V(DC))
Withstand voltage/耐电压:875V(AC)
Rated working current额定工作电流:9.0A

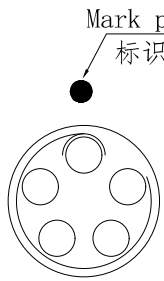

view K
K向孔位排列

Other Specification/其它规格:
Contact PIN/接触体: Gold plated Tin bronze/锡青铜镀金
Housing Material/外壳材质: Chrome plated brass/铜镀珍珠铬
Other metal spare parts/其余金属件: Nickel plated brass/铜镀镍
Insulator material/绝缘材料: PPS
IP Rating/防护等级: IP50
*ALL MATERIALS ARE RoHS COMPLIANT/所有材料均符合RoHS要求.

DRAWN BY: 绘图:PD03	2024.05.28	
CHECKED BY: 审核:Z01	2024.05.28	
APPROVED BY: 核准:PD05	2024.05.28	

GENERAL TOLERANCE
(UNLESS SPECIFIED)
≤10 ±0.1
<10~≤20 ±0.15
<20~≤50 ±0.3
AngTe ±1°

美易连电子科技（深圳）有限公司
Meiyilian electronic technology(shenzhen)Co.,Ltd.

FIRST ANGLE PROJECTION

单位 UNTT: mm	名称 PART NAME	1B-TG直式插头（带护套式尾帽） 1B-TG Straight plug (with jacketed tail cap)	
比例 SCALE: 1:1			
SIZE: A4	型号 PART NAME	TGG.1B.305.CLAD35Z	
REV/版本 A1	SHEET: 1 OF 1		