1）Product main performance/产品主要性能指标:

Operating Temperature/工作温度 : -55℃～200℃
Humidity(max)/最大潮湿 : <=95% [at 60 deg C / 140 F]
Shielding /屏蔽性能 : 75dB(10MHz) 40dB(1GHz)
Salt Spray Corrosion/盐 雾 : 96hr
P op (max)/最大环境压力 : 60 bar (870 psi)

Mechanical data/机械特性:
Vibration/振 动 : 15g[10Hz～2000Hz]
Shock Resistance/冲 击 : 100g[6ms]
Endurance (Shell)/机械寿命 : 5000次

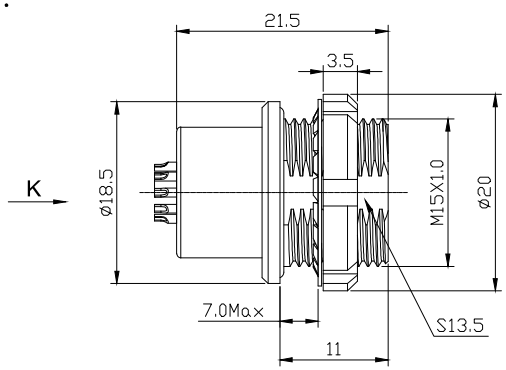

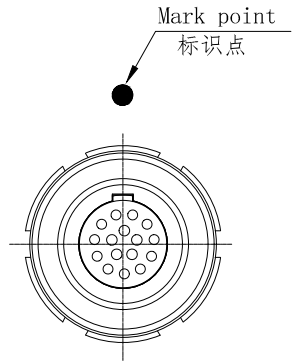

2.电气性能
Insert Configuration/针芯配置:2T.316 16Low Voltage
Pin Size/接触件直径:ø0.7mm
Contact resistance接触电阻:≤12.5mΩ
Insulation resistance/绝缘电阻:5000MΩ(测试电压500V(DC))
Withstand voltage/耐电压:875V(AC)
Rated working current额定工作电流:6.0A

Other Specification/其它规格:
Contact PIN/接触体: Gold plated Tin bronze/锡青铜镀金
Housing Material/外壳材质: Chrome plated brass/铜镀珍珠铬
Other metal spare parts/其余金属件: Nickel plated brass/铜镀镍
Insulator material/绝缘材料: PPS
IP Rating/防护等级: IP68(插合状态)
*ALL MATERIALS ARE RoHS COMPLIANT/所有材料均符合RoHS要求.

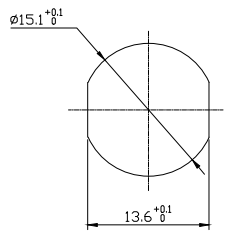

Panel cut-outs
建议安装开孔尺寸

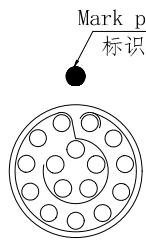

view K
K向孔位排列

DRAWN BY: 绘图:Z01 2024.6.20 CHECKED BY: 审核:Z01 2024.6.20 APPROVED BY: 核准:PD05 2024.6.20	MEIYILIAN 美易连	美易连电子科技（深圳）有限公司 Meiyilian electronic technology(shenzhen)Co.Ltd.	
GENERAL TOLERANCE (UNLESS SPECIFIED) ≤10 ±0.1 >10~≤20 ±0.15 >20~≤50 ±0.3 Angle ±1°	FIRST ANGLE PROJECTION	单位 UNIT: mm 比例 SCALE: 1:1 SIZE: A4 SHEET: 1 OF 1	名称 PART NAME: 2T-ME固定式插座 2T-ME Fixed socket 型号 PART NAME: MEG.2T.316.CLL
	REV/版本 A1		